UNIVERSAL BATTERY

UB-12U20.0 (12V20.0AH)



Capacity & electrical

Capacity (25°C)	
20HR(10.5V)	20Ah
10HR(10.5V)	19Ah
1HR(9.60V)	12Ah
Terminal type	T3/T12
Internal resistance (Fully charged,25°C)	Approx.12m Ω
Maximum charging current	6A
Maximum discharge current	300A(5 sec.)
Designed floating life(20°C)	5 years

Operating temperatures

Nominal operating temperature	25℃ ±3℃(77℉ ±5℉)
Discharge	-15℃~50℃(5℉~122℉)
Charge	-10℃~50℃(14℉~122℉)
Storage	-20℃~50℃(-4℉~122℉)

Charging parameters

Float charging voltage(25°C)

13.6 0 to 13.80V Temperature compensation: -18mV/℃

Cyclic charging voltage(25°C)

14.50 to 15.00V
Temperature compensation: -30mV/℃

Self-discharge (25°C)

3 months	Remaining Capacity:91%
6 months	Remaining Capacity:82%
12 months	Remaining Capacity:65%

Capacity affected by temperature (20HR)

40℃	102%
25℃	100%
0℃	85%
-15℃	65%

Specifications & technical details

Specifications

Nominal Voltage	12V	Length	181±2mm(7.13inch)
Rated capacity (20 hour rate)	20Ah	Width	77±1mm(3.03inch)
Approx. Weight	5.7kg(12.6lbs)±4%	Height	167±2mm(6.57inch)
		Total Height	167±2mm(6.57inch)

Outer dimensions (mm)

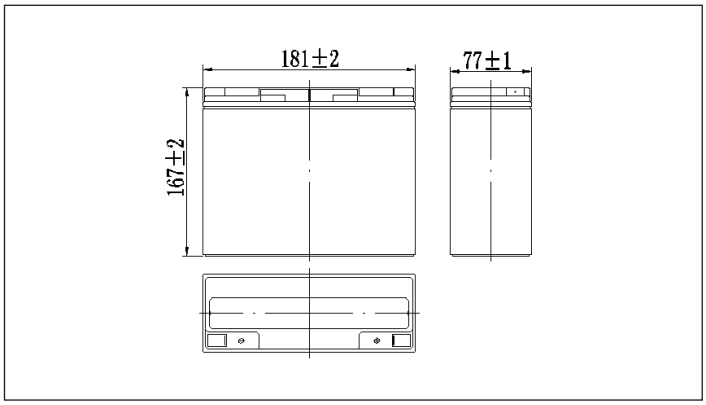

Terminal Type (mm)

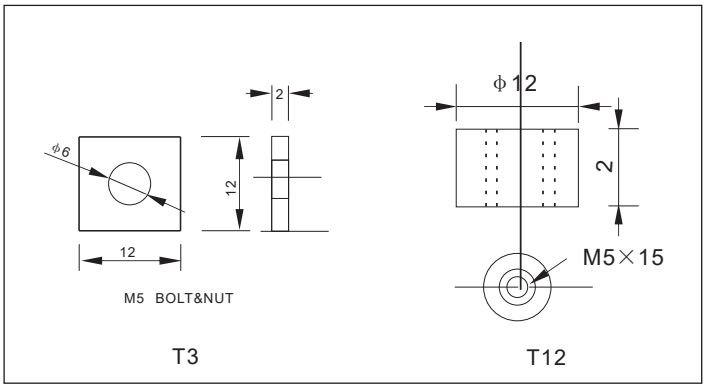

Construction

Component	Positive plate	Negative plate	Container	Cover	Separator	Electrolyte	Safety valve	Terminal
Raw material	Lead dioxide	Lead	ABS	ABS	AGM	Sulfuric acid	Rubber	Copper

Constant Current Discharge Characteristics Unit:A(25°C,77°F)

F.V/Time	5min	10min	15min	30min	60min	2h	3h	4h	5h	10h	20h
9.60V	78.3	49.6	38.7	21.8	13.4	7.35	5.08	4.20	3.58	1.94	1.04
9.90V	76.0	48.1	37.8	21.4	13.2	7.30	5.05	4.18	3.55	1.93	1.04
10.2V	72.8	46.1	36.4	20.7	12.9	7.24	5.02	4.15	3.53	1.92	1.03
10.5V	69.7	44.2	35.2	20.2	12.6	7.13	4.98	4.12	3.51	1.91	1.03
10.8V	65.8	41.7	33.3	19.5	12.2	6.95	4.83	4.00	3.40	1.87	1.00

Constant Power Discharge Characteristics Unit:W(25°C,77°F)

F.V/Time	5min	10min	15min	30min	60min	2h	3h	4h	5h	10h	20h
9.60V	874	560	442	250	155	85.9	60.4	50.1	42.7	23.3	12.5
9.90V	848	543	431	245	153	85.4	60.0	49.8	42.4	23.2	12.4
10.2V	813	520	415	238	149	84.7	59.6	49.4	42.1	23.1	12.4
10.5V	778	498	401	232	146	83.4	59.2	49.1	41.9	23.0	12.3
10.8V	734	470	380	223	142	81.3	57.4	47.6	40.6	22.5	12.1

Note: The above characteristics data can be obtained within three charge or discharge cycles.

Performance characteristics

Discharge characteristics (25°C)

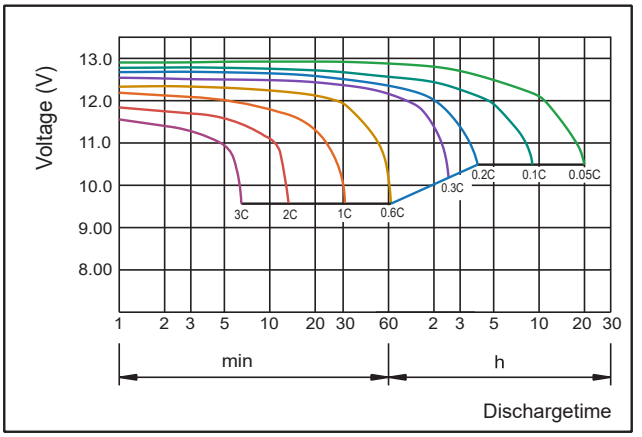

Charge characteristics (25°C)

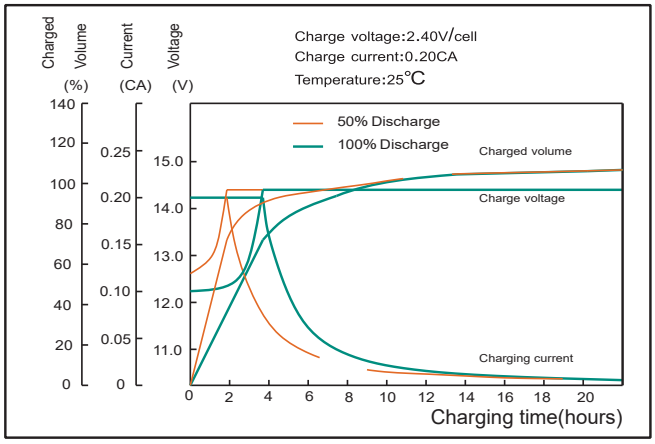

Effect of temperature on capacity

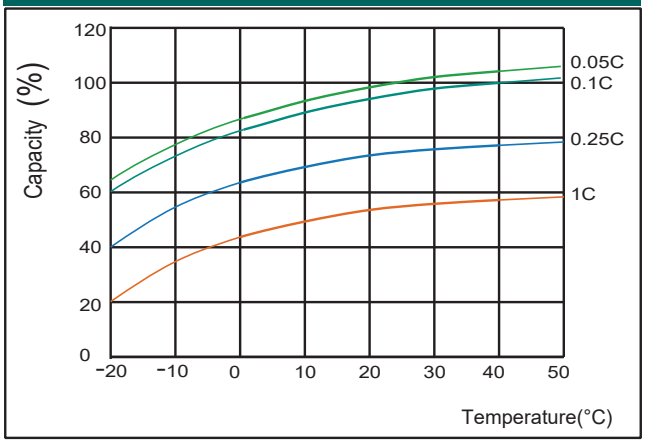

Self-discharge characteristics

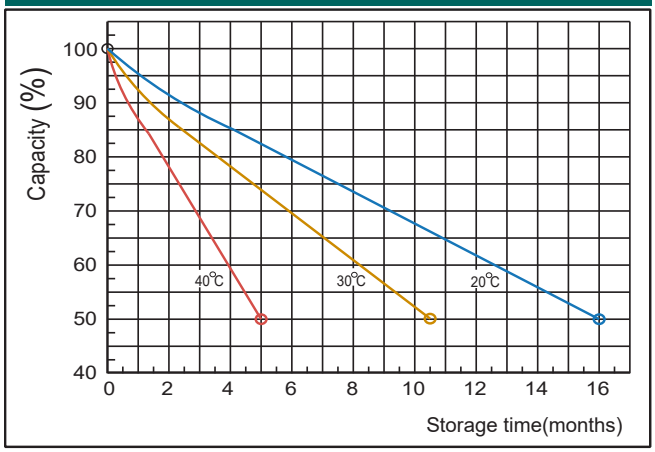

Floating life and temperature

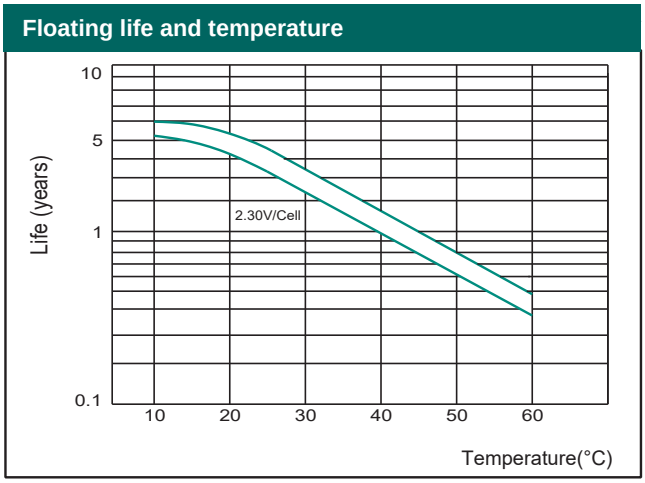

Cycle life vs. D.O.D. (25°C)

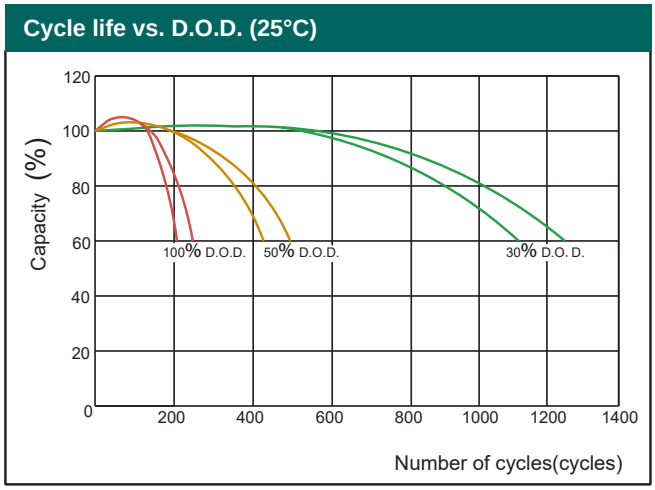

OCV and capacity (25°C)

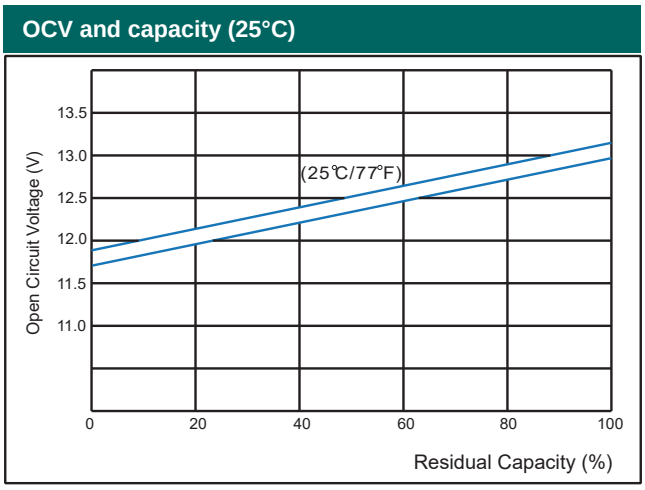

Charging voltage and temperature

