UB-12U35.0 (12V35.0AH)



Capacity & electrical

Capacity (25°C)	
10HR(10.8V)	35Ah
3HR(10.8V)	24Ah
1HR(10.5V)	19Ah
Terminal type	T14/T6
Internal resistance (Fully charged,25°C)	Approx.11m Ω
Maximum charging current	10.5A
Maximum discharge current	330A(5 sec.)
Designed floating life(20°C)	10years

Operating temperatures

Nominal operating temperature	25℃ ±3℃(77℉ ±5℉)
Discharge	-15℃~50℃(5℉~122℉)
Charge	-10℃~50℃(14℉~122℉)
Storage	-20℃~50℃(-4℉~122℉)

Charging parameters

Float charging voltage(25°C)

13.50 to 13.80V
Temperature compensation:
-18mV/℃

Cyclic charging voltage(25°C)

14.50 to 15.00V
Temperature compensation:
-30mV/℃

Self-discharge (25°C)

3 months	Remaining Capacity:91%
6 months	Remaining Capacity:82%
12 months	Remaining Capacity:65%

Capacity affected by temperature (10HR)

40℃	102%
25℃	100%
0℃	85%
-15℃	65%

Specifications & technical details

Specifications

Nominal Voltage	12V
Rated capacity (10 hour rate)	35Ah
Approx. Weight	10.50 kg(23.15 lbs)±4%

Length	195±2mm(7.68inch)
Width	130±2mm(5.12inch)
Height	155±2mm(6.10inch)
Total Height	T14:167±2mm(6.57inch) T6:180±2mm(7.09inch)

Outer dimensions (mm)

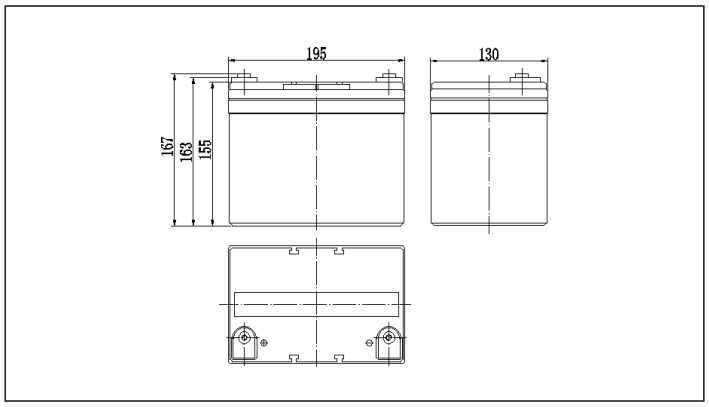

Terminal Type (mm)

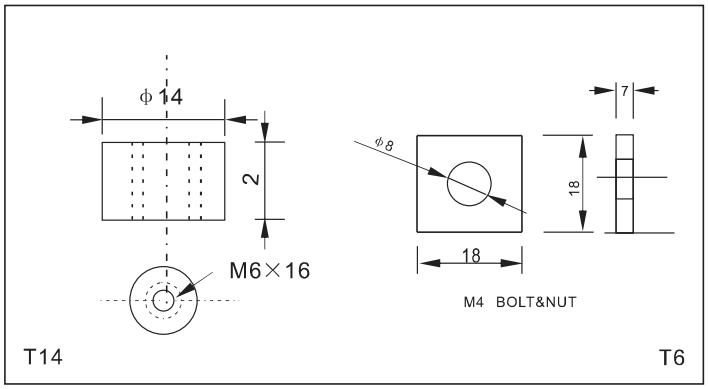

Construction

Component	Positive plate	Negative plate	Container	Cover	Separator	Electrolyte	Safety valve	Terminal
Raw material	Lead dioxide	Lead	ABS	ABS	AGM	Sulfuric acid	Rubber	Copper / lead

Constant Current Discharge Characteristics Unit:A(25°C,77°F)

F.V/Time	10min	15min	30min	60min	2h	3h	4h	5h	8h	10h	20h
9.60V	75.5	58.2	34.9	21.1	12.7	9.11	7.28	6.22	4.27	3.53	1.87
9.90V	73.3	56.8	34.1	21.1	12.6	9.06	7.23	6.18	4.25	3.52	1.87
10.2V	70.2	54.7	33.1	20.6	12.5	9.10	7.20	6.14	4.22	3.51	1.86
10.5V	67.2	52.8	32.2	20.1	12.3	8.94	7.14	6.10	4.19	3.49	1.85
10.8V	63.4	50.1	31.1	19.3	12.0	8.67	6.92	5.91	4.06	3.47	1.84

Constant Power Discharge Characteristics Unit:W(25°C,77°F)

F.V/Time	10min	15min	30min	60min	2h	3h	4h	5h	8h	10h	20h
9.60V	815.9	639.5	390.6	243.6	147	107.1	85.6	73.5	50.8	42.0	22.5
9.90V	791.7	623.7	383.3	240.5	146	107.1	85.2	73.1	50.5	42.0	22.4
10.2V	759.2	600.6	371.7	234.2	144.9	106.1	84.5	72.6	50.2	42.0	21.3
10.5V	725.6	580.7	362.3	226.8	142.8	105.0	83.9	72.1	49.8	41.7	22.2
10.8V	685.7	550.2	348.6	219.5	138.6	102.0	81.4	90.0	48.3	41.4	23.2

Note: The above characteristics data can be obtained within three charge or discharge cycles.

Performance characteristics

Discharge characteristics (25°C)

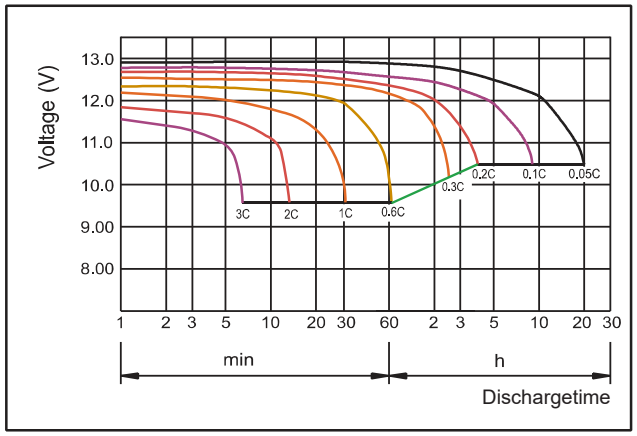

Charge characteristics (25°C)

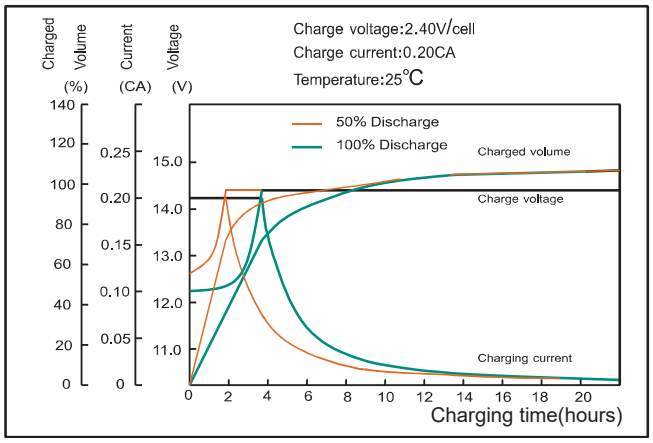

Effect of temperature on capacity

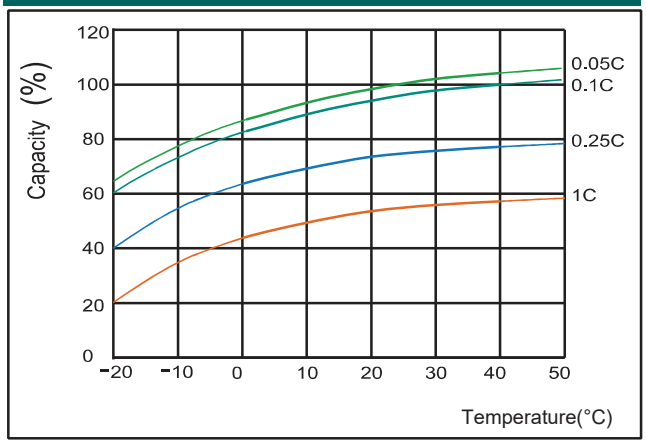

Self-discharge characteristics

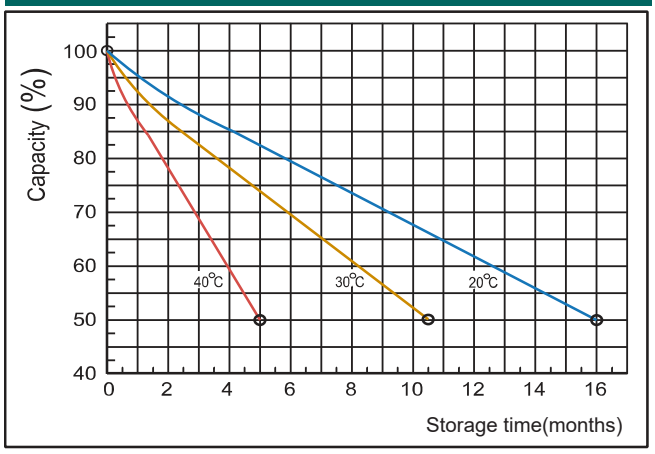

Floating life and temperature

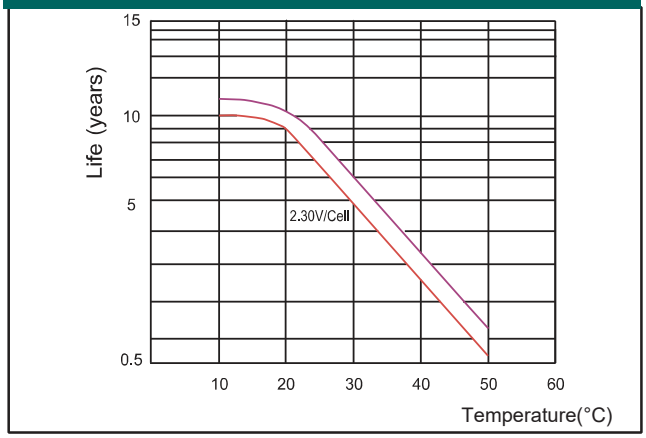

Cycle life vs. D.O.D. (25°C)

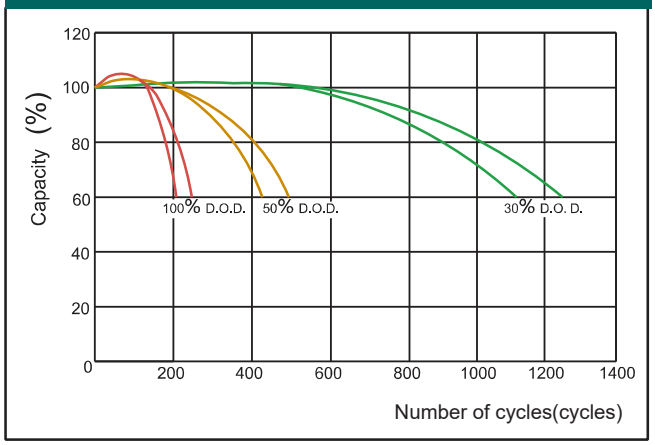

OCV and capacity (25°C)

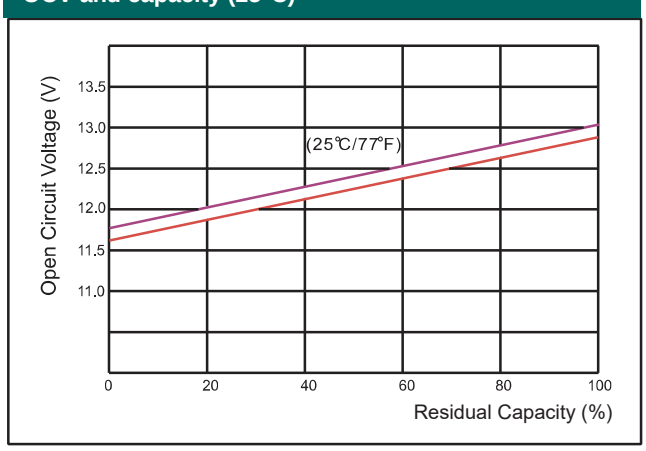

Charging voltage and temperature

