UNIVERSAL BATTERY

UB-12U55.0

(12V55.0AH)



Capacity & electrical

Capacity (25°C)	
10HR(10.8V)	**55Ah**
3HR(10.8V)	**41.1Ah**
1HR(10.5V)	**30.5Ah**
Terminal type	**T14**
Internal resistance (Fully charged,25°C)	**Approx.6.5mΩ**
Maximum charging current	**16.5A**
Terminal material	**Copper**
Maximum discharge current	**550A(5 sec.)**
Designed floating life(20°C)	**10years**

Operating temperatures

Nominal operating temperature	**25°C±3°C (77°F±5°F)**
Discharge	**-15°C~50°C (5°F~122°F)**
Charge	**-10°C~50°C (14°F~122°F)**
Storage	**-20°C~50°C (-4°F~122°F)**

Charging parameters

Float charging voltage(25°C)

13.50 to 13.80V

Temperature compensation: -18mV/°C

Cyclic charging voltage(25°C)

14.50 to 15.00V

Temperature compensation: -30mV/°C

Self-discharge (25°C)

3month	**Remaining Capacity:91%**
6month	**Remaining Capacity:82%**
12month	**Remaining Capacity:65%**

Capacity affected by temperature (10HR)

40°C	**102%**
25°C	**100%**
0°C	**85%**
-15°C	**65%**

Specifications & technical details

Specifications

Nominal Voltage	**12V**
Rated capacity (10 hour rate)	**55Ah**
Approx. Weight	**17.3kg (38.1lbs)±3%**

Length	**230±2mm (9.06inch)**
Width	**138±2mm (5.43inch)**
Height	**211±2mm (8.31inch)**
Total Height	**215±2mm (8.46inch)**

Outer dimensions (mm)

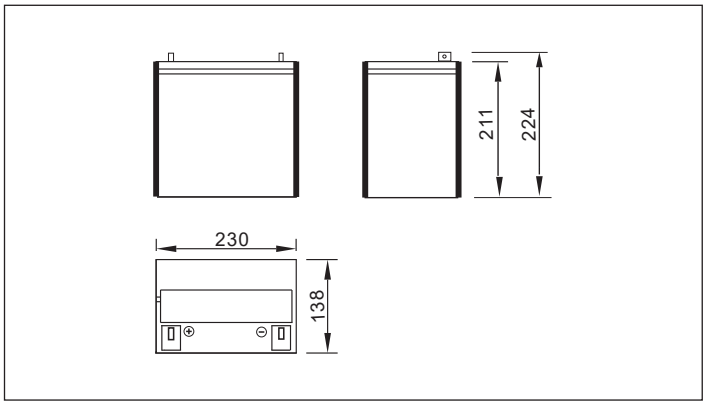

Terminal Type (mm)

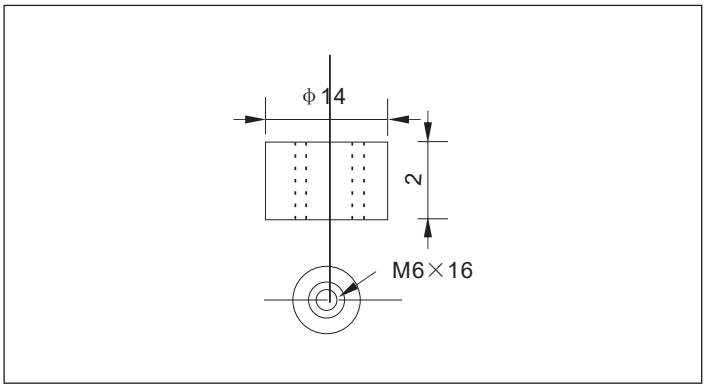

Construction

Component	Positive plate	Negative plate	Container	Cover	Separator	Electrolyte	Safety valve	Terminal
Raw material	Lead dioxide	Lead	ABS	ABS	AGM	Sulfuric acid	Rubber	Copper

● Constant Current Discharge Characteristics Unit:A(25°C,77°F)

F.V/Time	10min	15min	30min	60min	2h	3h	4h	5h	8h	10h	20h
9.60V	120	92.4	55.3	34.0	20.1	14.5	11.6	9.87	6.79	5.60	2.97
9.90V	116	90.2	54.2	33.5	20.0	14.4	11.5	9.82	6.75	5.59	2.96
10.2V	112	86.9	52.5	32.6	19.8	14.3	11.4	9.75	6.70	5.57	2.95
10.5V	107	83.9	51.2	31.6	19.5	14.2	11.3	9.68	6.66	5.54	2.94
10.8V	101	79.5	49.4	30.6	19.0	13.8	11.0	9.39	6.46	5.50	2.92

● Constant Power Discharge Characteristics Unit:W(25°C,77°F)

F.V/Time	10min	15min	30min	60min	2h	3h	4h	5h	8h	10h	20h
9.60V	1295	1015	620	387	233	170	136	117	80.6	66.9	35.6
9.90V	1256	990	608	382	231	169	135	116	80.2	66.7	35.5
10.2V	1204	954	589	372	229	168	134	115	79.6	66.5	35.4
10.5V	1152	921	575	360	226	167	133	114	79.1	66.1	35.2
10.8V	1088	873	554	349	220	162	129	111	76.7	65.7	35.0

Note: The above characteristics data can be obtained within three charge or discharge cycles.

Performance characteristics

Discharge characteristics (25°C)

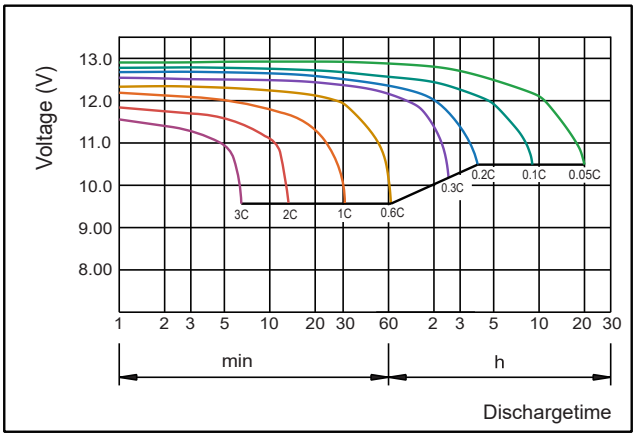

Charge characteristics (25°C)

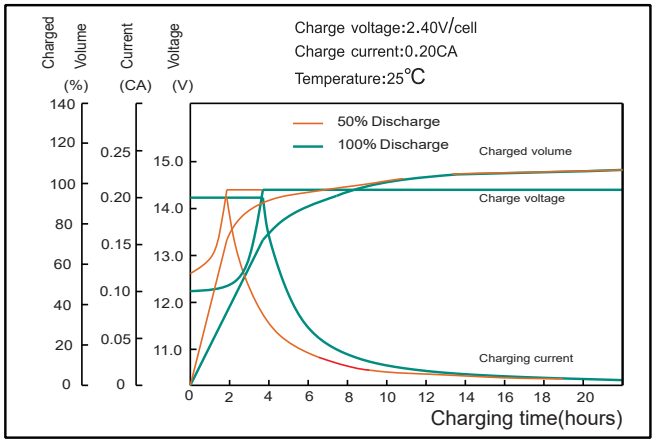

Effect of temperature on capacity

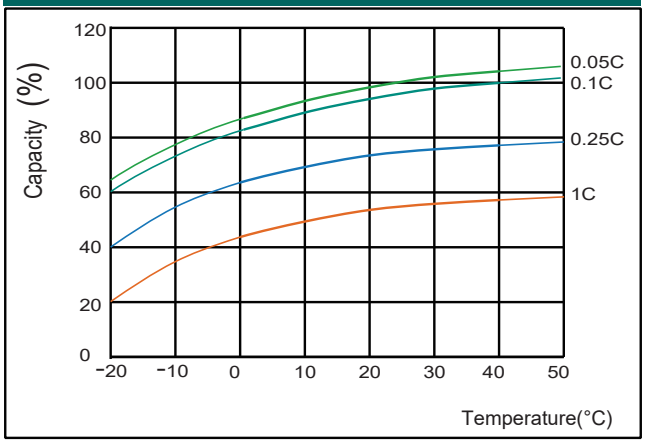

Self-discharge characteristics

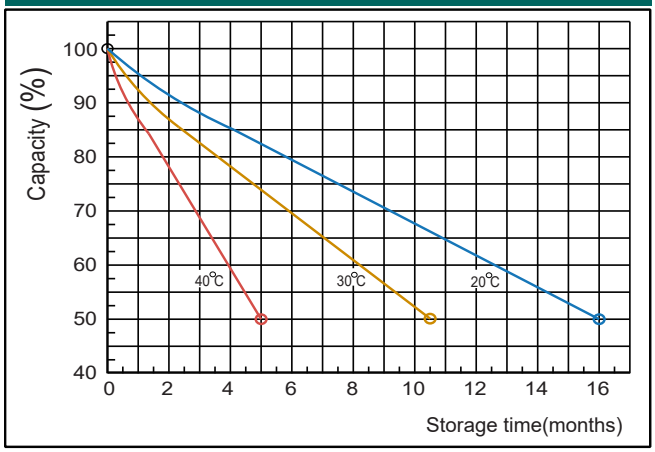

Floating life and temperature

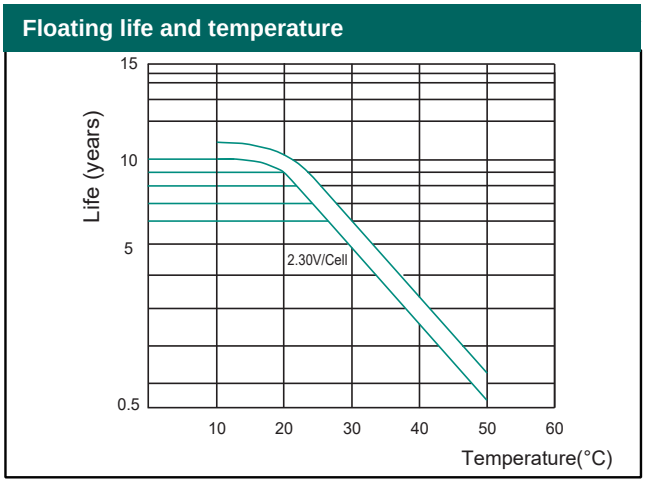

Cycle life vs. D.O.D. (25°C)

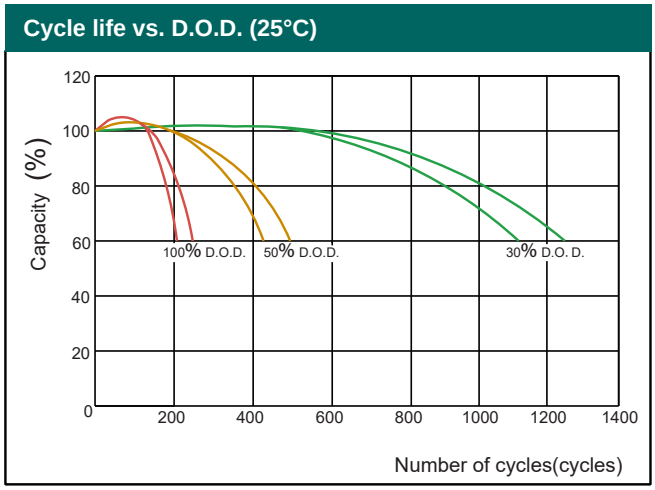

OCV and capacity (25°C)

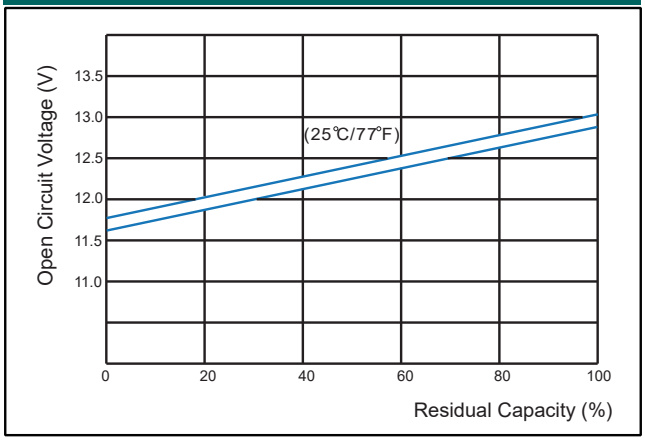

Charging voltage and temperature

